PATENTANWÄLTIN
WEISSE
European Patent Attorney

Who protects what?

Latest developments in the field of testing

Innotesting 21. Feb. 2014

PATENTANWÄLTIN
WEISSE
European Patent Attorney

Renate Weisse

Physics (Diploma) at TU Berlin
Chemistry (Pre-Diploma) at TU Berlin
Thesis at The Perkin Elmer Corp. Überlingen
Institute for Spektroskopy and Spektrochemistry in Berlin-Adlershof

Patent Attorney Trainee in the family enterprise
Practical Work at McLachlan & Donaldson, Dublin
German Patent Representative – Deutsches Patent- und Markenamt
European Patent Attorney – European Patent Office
Master of Laws (LL.M.) in European Intellectual Property

3 children

PATENTANWÄLTIN
WEISSE
European Patent Attorney

Motivation

- Art.65 Sec.1 European Patent Convention

A European patent shall…confer ***on its proprietor*** *…the same rights as would be conferred by a national patent granted in that state.*

But what is the national law?

PATENTANWÄLTIN
WEISSE
European Patent Attorney

Motivation

- §9 German Patent Act

A patent shall have the effect that the patentee alone shall be authorized to use the patented invention.

But what is patented?

PATENTANWÄLTIN
WEISSE
European Patent Attorney

Patentverletzung

§14 German Patent Act

The extent of the protection conferred by a patent …shall be determined by the terms of the ***claims.***

Solution: Claims are the answer to the question: What is protected?

PATENTANWÄLTIN
WEISSE
European Patent Attorney

Patent specification

- **Description**
  - Technical Field
  - Prior Art
  - Disclosure of the invention
    (Object, main features of the invention and the advantages)
  - Description of the drawings
  - Detailed (!) description of embodiments
- **Claims –** broad wording!
- **Drawings**

Claim

Example

EP 1 364 203 B1 granted on 09.Feb.2011

Lockheed Martin Corporation

„Remote Laser Beam Delivery System and Method for use for Ultrasonic Testing purposes“

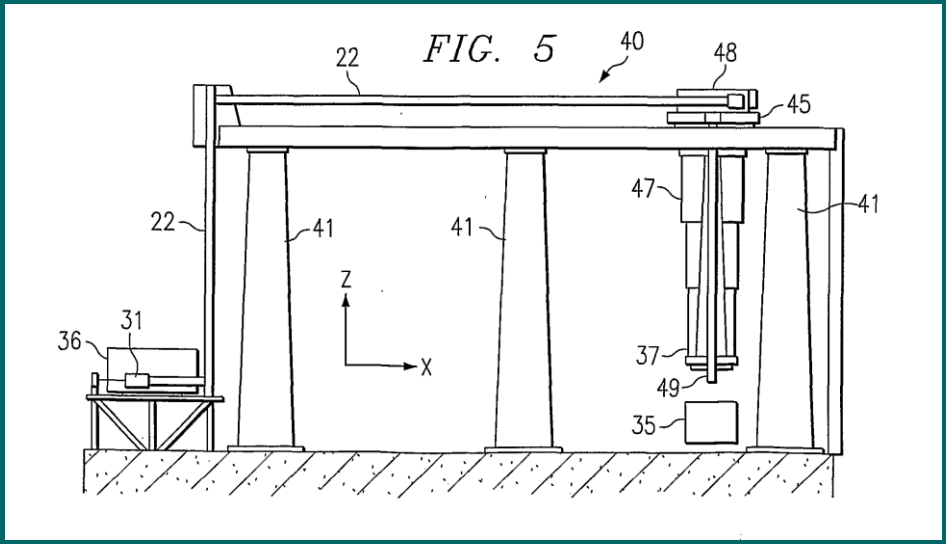

PATENTANWÄLTIN
WEISSE
European Patent Attorney

Claim

Publication of the Application

A Gantry positioning and laser ultrasonic testing system with an integral laser beam delivery system, comprising: a gantry positioning system comprising a plurality of gantry members pivotally connected at each end and powered by a plurality of gantry actuators for positioning an end gantry member at any location within a predetermined volume wherein each gantry member comprises an optical transmission channel comprising at least two alignment fixtures and at least one position feedback sensor for providing an alignment signal; an integral laser beam delivery system for delivering a laser beam emitted from a remote laser source to a test object first from a first field of view and subsequently from at least one additional field of view within said predetermined volume for acquiring test object data, comprising: a remote laser source for emitting said laser beam, said laser beam being inserted into a first gantry member‘s optical transmission channel and exiting through an end gantry member‘s optical transmission channel; a plurality of mirrors wherein at least one mirror being located at each pivotal connection of said gantry members in response to at least one of said alignment signals from said position feedback sensors for providing closed-loop error correction for unobstructed transmission of said laser beam through said optical transmission channels of said plurality of gantry members for directing said laser beam through said gantry positioning system; and a laser beam conditioning system for minimizing divergence of said laser beam and an ultrasonic testing system for identifying material defects of said test object using said test object data.

PATENTANWÄLTIN
WEISSE
European Patent Attorney

Claim

Granted Patent

A Gantry positioning operably coupled to a laser ultrasonic testing system and having an integral laser beam delivery system, comprising: a gantry positioning system comprising a plurality of gantry members pivotally connected at each end and powered by a plurality of gantry actuators for positioning an end gantry member at any location within a predetermined volume wherein each gantry member comprises an optical transmission channel comprising at least two alignment fixtures and at least one position feedback sensor for providing an alignment signal; an integral laser beam delivery system for delivering a laser beam emitted from a remote laser source to a test object first from a first field of view and subsequently from at least one additional field of view within said predetermined volume for acquiring test object data, comprising: a remote laser source for emitting said laser beam,such that said laser beam is inserted into a first gantry member‘s optical transmission channel and exits through an end gantry member‘s optical transmission channel; a plurality of mirror actuators for controlling the angular alignement of a plurality of mirrors wherein at least one mirror being located at each pivotal connection of said gantry members in response to at least one of said alignment signals from said position feedback sensors for providing closed-loop error correction for the unobstructed transmission of said laser beam through said optical transmission channels of said plurality of gantry members for directing said laser beam through said gantry positioning system; and a laser beam conditioning system for minimizing divergence of said laser beam and an ultrasonic testing system for identifying material defects of said test object using said test object data.

Claim

Cited Prior Art in the Official Examination:

WO-A-00/00783
WO-A-86/00557
WO-A-95/03526
US-A- 4 659 902
US-A- 4 817 016

PATENTANWÄLTIN
WEISSE
European Patent Attorney

Search

Search

- **Novelty Search:**
  only disclosure is considered
  Independent of country, scope, duration, state of the file etc.

PATENTANWÄLTIN
WEISSE
European Patent Attorney

Search

- **Novelty Search:**
  only disclosure is considered
  Independent of country, scope, duration, state of the file etc.
- **FTO (Freedom to operate):**
  Only the scope of the claim must be considered
  Not: inactive, rejected or foreign protective rights

PATENTANWÄLTIN
WEISSE
European Patent Attorney

Search

- **Novelty Search:**
  only disclosure is considered
  Independent of country, scope, duration, state of the file etc.
- **FTO (Freedom to operate):**
  Only the scope of the claim must be considered
  Not: inactive, rejected or foreign protective rights
- **Monitoring**
  current observation of the patent literature for avoiding infringement and unnecessary developing of already known technology.

PATENTANWÄLTIN WEISSE
European Patent Attorney

www.depatisnet.de

available in English

https://depatisnet.dpma.de/DepatisNet/depatisnet?window=1&space=menu&conte

DEPATISnet

Deutsches Patent- und Markenamt

DEPATISnet-Home | Deutsch | Information | Introduction | Imprint | Help

DEPATISnet

Search | IPC

DEPATISnet is the database of the German Patent and Trade Mark Office for online searches on patent publications from around the world. It includes the internal DEPATIS electronic document archive of the office (German patent information system). For detailed information on the available data click here.

- **Choose a search mode:**
  - **Beginner**
  - **Expert**
  - **Ikofax**

- International Patent Classification (**IPC**): as the basis of a prior art search

You can use IPC symbols for your patent or utility model document search. After having identified the segment of technology you are interested in you can transfer your selected IPC symbol into DEPATISnet search just by clicking on .

For background information on the IPC click here.

- A patent information centre will help you with your search: **PIZ support**

Please read our terms and conditions of use.

DE 15:02 17.02.2014

PATENTANWÄLTIN WEISSE
European Patent Attorney

Beginner‘s Search

https://depatisnet.dpma.de/DepatisNet/depatisnet?action=einsteiger

DEPATISnet-Home | Deutsch | Information | Introduction | Imprint | Help

Deutsches Patent- und Markenamt

DEPATISnet

Search | IPC

Beginner | Expert | Ikofax | Family | PIZ support

> DEPATISnet-Home > Search > Beginner

Beginner's search

All the following fields are connected by AND. You must at least fill in one field

For more information please see the Help pages of the Beginner's search.

Formulate search

Publication number		DE4446098C2
Title		microprocessor
Applicant/Owner/Inventor		Heinrich Schmidt
Publication date		12.10.1999
All IPC fields		F17D5/00
Search in full text		bicycle

Configure result lists

- [x] Publication number
- [x] Title
- [ ] Inventor
- [ ] Applicant/Owner
- [ ] Publication date
- [ ] Application date
- [ ] Search file IPC
- [ ] IPC main class

Search list sorted by Standard ascending

50 Results/page

Start search Reset

DE 15:01 17.02.2014

PATENTANWÄLTIN
WEISSE
European Patent Attorney

Expert Search

https://depatisnet.dpma.de/DepatisNet/depatisnet?action=experte

DEPATISnet

Deutsches Patent- und Markenamt

DEPATISnet-Home | Deutsch | Information | Introduction | Imprint | Help

DEPATISnet

Search | IPC

Beginner | Expert | Ikofax | Family | PIZ support

> DEPATISnet-Home > Search > Expert

Expert search

For more information please see the Help pages of the Expert search.

Formulate search

Input field:

Show input tools

Configure result lists

- [x] Publication number
- [x] Title
- [ ] Inventor
- [ ] Applicant/Owner
- [ ] Publication date
- [ ] Application date
- [ ] Search file IPC
- [ ] IPC main class

Search list sorted by Standard ascending

50 Results/page

Start search Reset

DE 15:01 17.02.2014

PATENTANWÄLTIN
WEISSE
European Patent Attorney

Expert Search

Time?

Publication Year PY

PY > 2010

PATENTANWÄLTIN
WEISSE
European Patent Attorney

Expert Search

Time?

Publication Year PY

PY > 2010

Countries?

Protective rights effective in US, DE and Europe: US, DE, EP

PY > 2010 UND (PC= DE ODER PC= EP ODER PC=US)

PATENTANWÄLTIN
WEISSE
European Patent Attorney

Expert Search

Inventors already known?

Edmund Ahlers, Marc Kreutzbruck, Günter Albrecht, Uwe Pfeifer, Berend van der Wall, Joseph D. Brostmeyer, Joachim Schöffer, Robert Klöpper, Thomas Heckel

Inventor IN

PY > 2010 UND (PC= DE ODER PC= EP ODER PC=US) UND ((IN = Edmund UND In = Ahlers) ODER (IN = Marc UND IN = Kreutzbruck) ODER…ODER (In = Thomas UND In = Heckel))

PATENTANWÄLTIN
WEISSE
European Patent Attorney

Expert Search

Known applicants/proprietors?

Airbus Operations GmbH, EADS Deutschland GmbH, AneCom AeroTest GmbH, BAM, BBAT Berlin Brandenburg Aerospace Technology, Deutsches Zentrum für Luft- und Raumfahrt e.V.

Applicant/Owner PA

PY > 2010 UND (PC= DE ODER PC= EP ODER PC=US) UND ((PA= Airbus UND PA= Airbus) ODER (PA= EADS) ODER (PA= AneCom?) ODER (PA= Berlin UND PA=Brandenburg UND PA= Aerospace) ODER (PA= Deutsches UND PA= Zentrum UND PA= Raumfahrt)

PATENTANWÄLTIN
WEISSE
European Patent Attorney

Expert Search

Many hits, including

~~Heat insulating cover for a gas turbine engine~~

PATENTANWÄLTIN
WEISSE
European Patent Attorney

Expert Search

Combination Applicant/Owner and key words

Keywords: BI

PY > 2010 UND (PC= DE ODER PC= EP ODER PC=US) UND (PA= Airbus ODER PA= EADS ODER PA= AneCom? ODER (PA= Berlin UND PA=Brandenburg UND PA= Aerospace) ODER (PA= Deutsches UND PA= Zentrum UND PA= Raumfahrt) UND (BI=test? ODER BI=simulat? ODER BI= aer? ODER BI= air? ODER BI= ?space)

PATENTANWÄLTIN
WEISSE
European Patent Attorney

Expert Search

For Shorter Hitlist:

Limit by IPC classes („*ICM=*“) for example:

G01N: INVESTIGATING OR ANALYSING MATERIALS BY DETERMINING THEIR CHEMICAL OR PHYSICAL PROPERTIES

G01M: TESTING STATIC OR DYNAMIC BALANCE OF MACHINES OR STRUCTURES; TESTING OF STRUCTURES OR APPARATUS

PATENTANWÄLTIN WEISSE European Patent Attorney

Results (only granted Patents)

EP 1 364 203 9.Feb 2011 Lockheed Martin Corporation

Remote Laser Beam Delivery System and Method for Use for Ultrasonic Testing Purposes

DE 20 20011 108 834 U1 23.Jan 2012 FTI Engineering Network GmbH

Messgerät für die Erkennung, Auswertung und Ergebnissicherung von Schäden an Flugzeugfenstern mit Hilfe der Dunkelfeld-Beleuchtungsmethode

DE 10 2012 101 467 B4 31.Okt 2013 BAM Bundesanstalt für Materialforschung

Vorrichtung zur thermografischen Prüfung auf Defekte insbesondere auf Risse in Oberflächen und Hohlräumen

DE 10 2007 019 402 B4 25. Aug 2011 Airbus Operations GmbH

Verfahren zur Durchführung eines Bodenvibrationstests bei Flugzeugen

DE 10 2008 041 916 B3 21. Jan 2010 AneCom AeroTest GmbH

Testvorrichtung für den Fan eines Flugzeugtriebwerks

PATENTANWÄLTIN WEISSE European Patent Attorney

Results

DE 10 2007 019 402 B4 25. Aug 2011 Airbus Operations GmbH

Verfahren zur Durchführung eines Bodenvibrationstests bei Flugzeugen

US 8 096 185 B2 17. Jan 2012 Airbus Operations GmbH

Apparatus for Performing Ground Vibration Tests on Airplanes

1. A system for performing a ground vibration test on an airplane, comprising:

a plurality of vibration exciters coupled to a plurality of locations on the airplane that operate to excite the airplane to vibrate;

a plurality of measuring transducers coupled to the airplane and operating to produce a plurality of measuring values;

at least one holding device, including a hydraulic lift, that provides an undamped, and substantially rigid support for the airplane between the airplane and ground; and

a processing system comprising an evaluator that implements a predetermined, simple, rigid holding model for the substantially rigid support.

Results

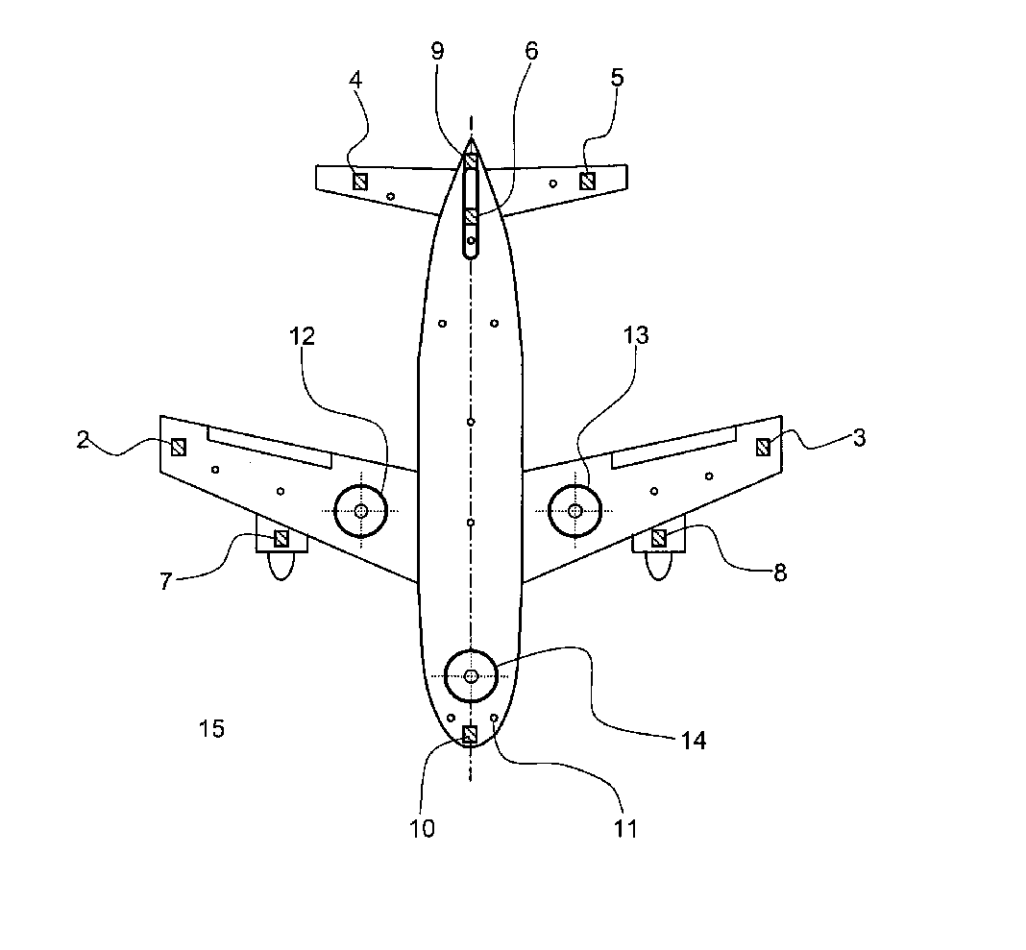

PATENTANWÄLTIN WEISSE
European Patent Attorney

Results

EP 2 508 861 A1 (not granted) 31. May 2011 Resonic GmbH

System and method for determining inertia properties of a rigid body

System for determining inertia properties of a rigid body, particularly the inertia tensor, the mass and/or the position of the center of mass, comprising:

- a carrier, which is designed for suspending a rigid body from the carrier, such that the rigid body is able to perform movements along a number of degrees of freedom of the rigid body,
- as many sensors as degrees of freedom of the rigid body providing output signals for detecting the movement of the rigid body along said number of degrees of freedom of the rigid body,
- a measuring device cooperating with the sensors, wherein the measuring device is configured to measure said movement of the rigid body by means of said output signals, and
- an analysing means configured for determining from said output signals said intertia properties of the rigid body.

Results

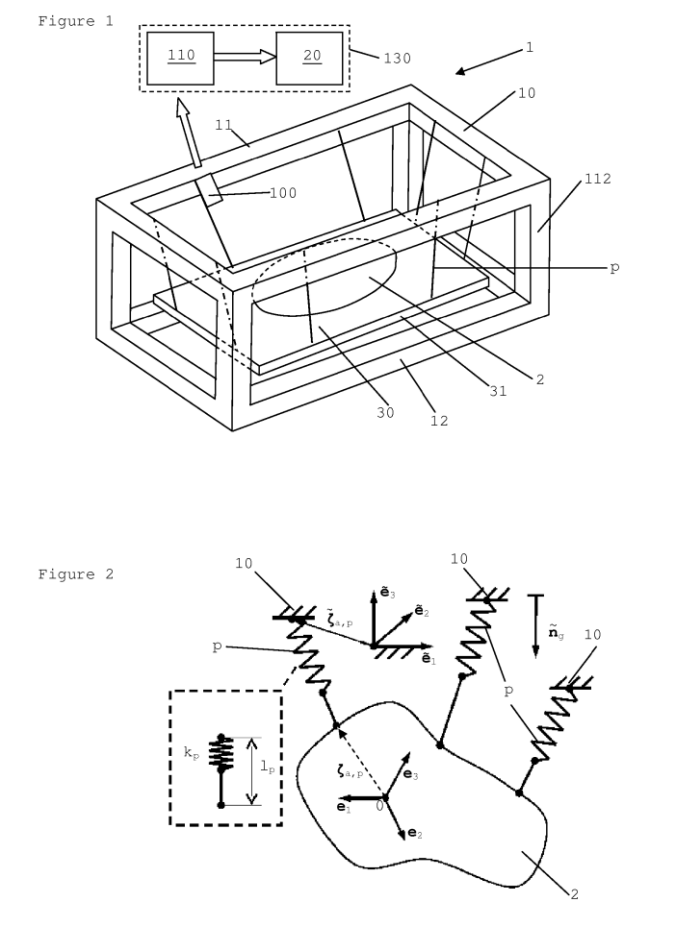
Figure 1
110
20
130
1
10
11
100
112
p
2
31
30
12
Figure 2
10
10
10
p
p
2

PATENTANWÄLTIN WEISSE
European Patent Attorney

Results

EP 2 657 674 A1 (not granted) 29. March 2013 Giuliano Group S.p.A
Test bench for suspensions of vehicles

Test bench (1) for suspensions of vehicles, comprising a bearing structure (2), at least a measuring appliance (3) supported by said bearing structure (2) and having:

- at least a plate (4) intended to receive in support a wheel of a vehicle and associated with said bearing structure (2) which can oscillate between a raised position and a lowered position;
- measuring means (5) for measuring the force applied by said wheel onto said plate (4);
- at least an eccentric element (6) operatively associated with rotation means (7) and with said plate (4) and suitable for transforming the rotational motion produced by said rotation means (7) into the oscillation motion of said plate (4) between said raised position and said lowered position;

characterized by the fact that said measuring appliance (3) comprises at least a shock absorbing element (8) placed between said bearing structure (2) and said plate (4) and suitable for operating in contrast to the displacement of said plate (4) from said raised position to said lowered position.

More

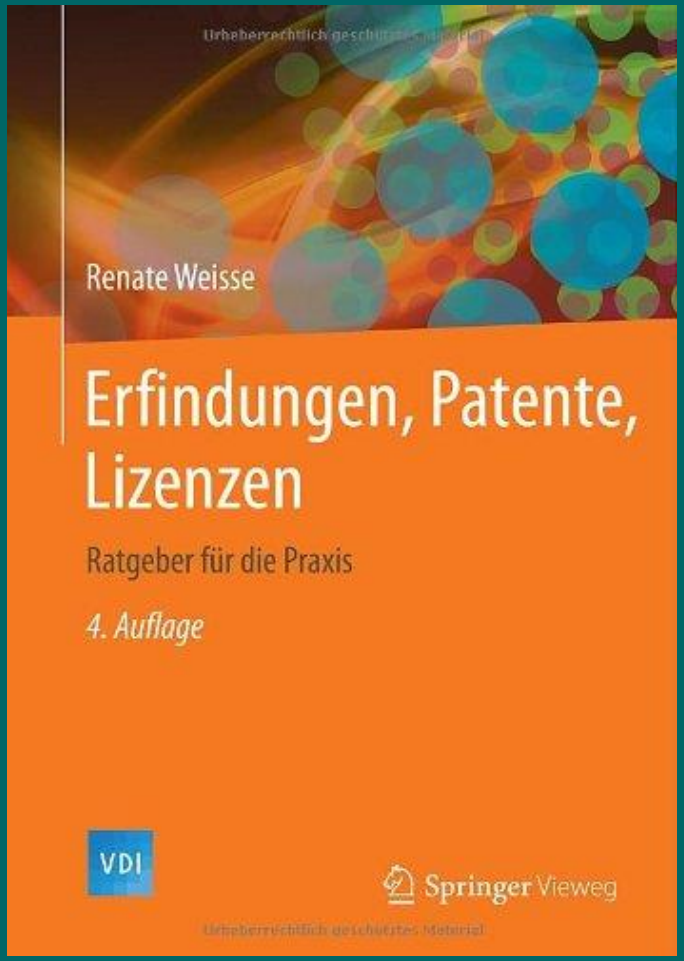
Renate Weisse
Erfindungen, Patente, Lizenzen
Ratgeber für die Praxis
4. Auflage
VDI
Springer Vieweg

PATENTANWÄLTIN
WEISSE
European Patent Attorney

The End

Thank you for your attention